Mash Re-circulation

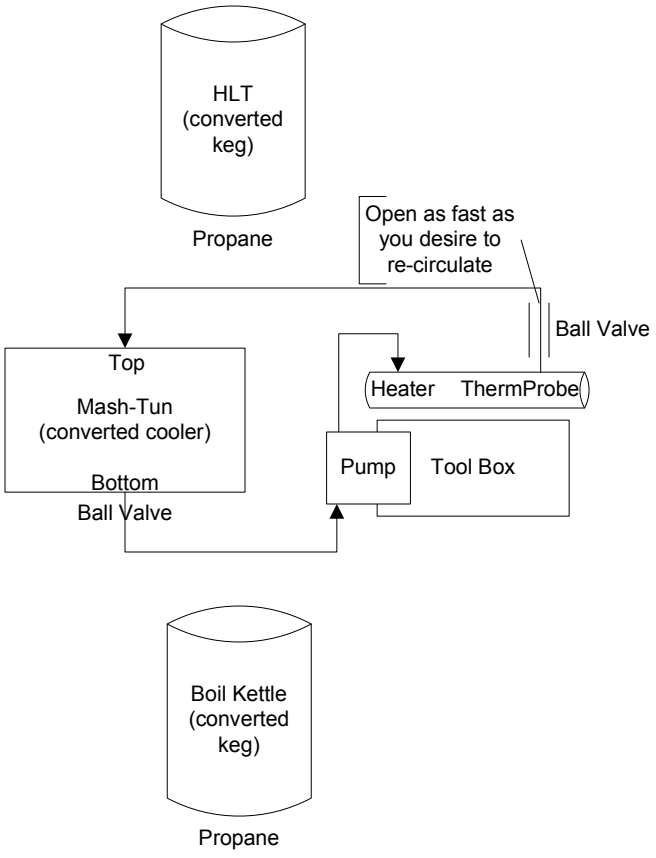

Sparging

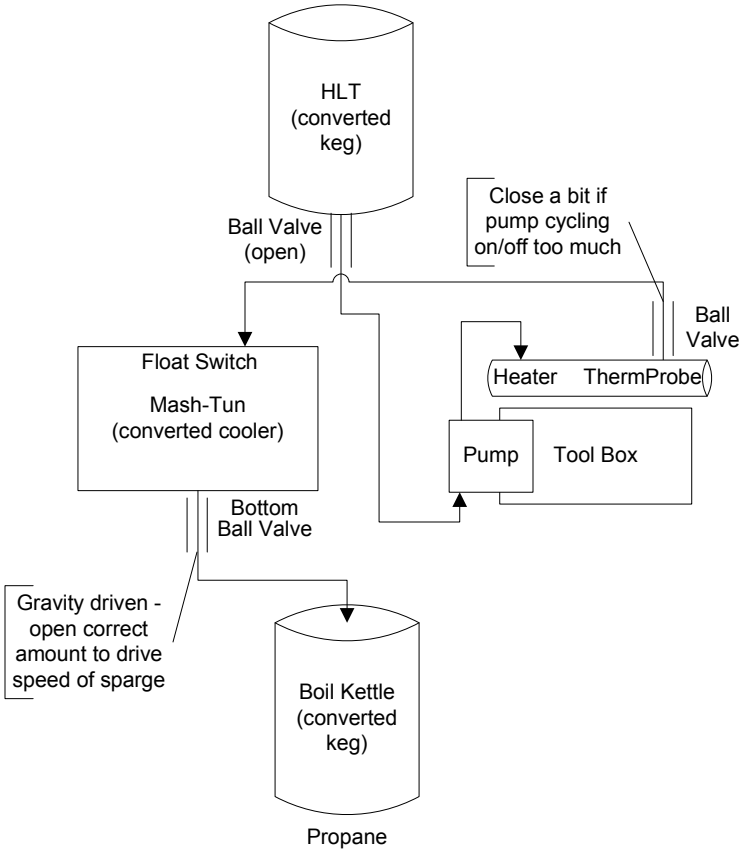

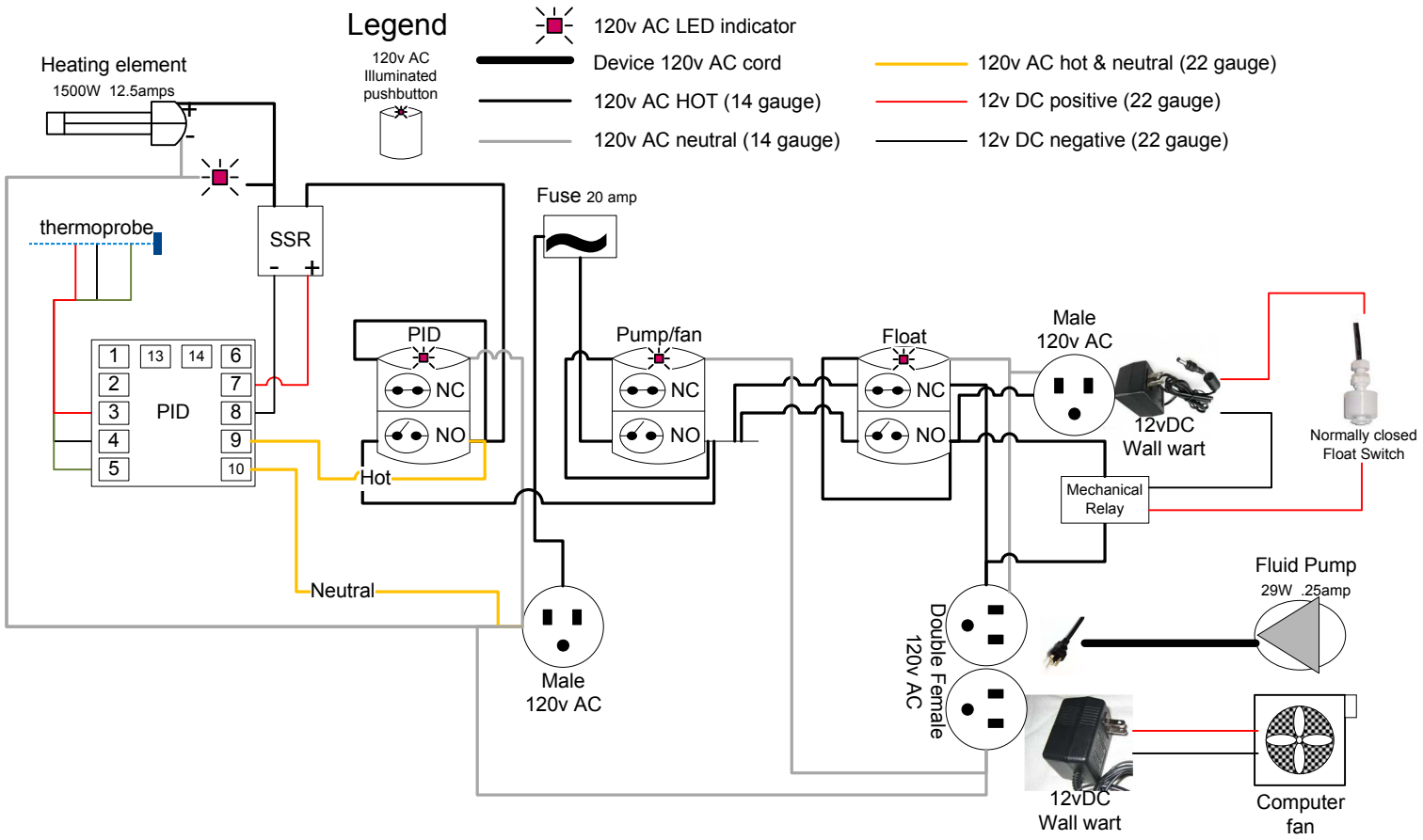
Legend
120v AC LED indicator
Device 120v AC cord
120v AC HOT (14 gauge)
120v AC neutral (14 gauge)
120v AC hot & neutral (22 gauge)
12v DC positive (22 gauge)
12v DC negative (22 gauge)
120v AC Illuminated pushbutton
Heating element
1500W 12.5amps
thermoprobe
SSR
- +
PID
1 13 14 6
2 7
3 8
4 9
5 10
PID
NC
NO
Hot
Neutral
Fuse 20 amp
Pump/fan
NC
NO
Male 120v AC
Float
NC
NO
Male 120v AC
12vDC Wall wart
Normally closed Float Switch
Mechanical Relay
Double Female 120v AC
Fluid Pump
29W .25amp
12vDC Wall wart
Computer fan